new india electricals

Power Management Systems

- SERVO STABILIZERS
- INDUSTRIAL UPS SYSTEMS
- DC POWER SYSTEMS
- ACTIVE POWER FACTOR CONTROLLER
- ACTIVE HARMONIC FILTERS

INTRODUCTION

New India Electricals is one of the Pioneers in the Electrical & Power Management Systems. Our aim is to provide a comprehensive range of highly reliable POWER MANAGEMENT equipments and systems to customers all over the world.

With the right mix of products, a WORLD-CLASS Team and a REPUTABLE name for design & engineering, we can provide you with the ideal solution for any requirement be it standardized or customized.

Buying equipments from New India Electricals means gaining a partner you can rely on for your equipment's life time. We shall help you make decision regarding your need right from the early design stage, to actual delivery phase and throughout its life cycle.

Our equipments are manufactured under the most stringent quality processes with a clear focus on performance and longevity. This is why we source sub components from global leaders like TOSHIBA, MITSIBISHI, EXIDE, ABB, SIEMENS and the like.

Why install Power Management Systems?

Most of the modem day equipments and systems are: Inductive loads that are highly Power Sensitive and fitted with Electronic controls. Some systems are critical and thus may need uninterrupted power Supply.

Inductive loads cause poor power factors; Power Sensitive loads needs constant voltage supply; Electronic controls and equipments cause large current harmonics in the network. Each of the above situation pollutes the power of the system in its own way resulting in: higher maximum demand; overheating of cables; premature ageing of equipments ; stray tripping of breakers ; poor utilization of utility power; flickering, surges and breakdowns.

New India Electricals can help you with each of these problems to optimize your network, enhance power quality and protect equipments and systems.

SERVO STABILIZERS :

We manufactures the complete range of SERVO STABILIZERS for commercial and industrial applications. SERVO STABILIZERS are electro mechanical systems which correct the source voltage (utility / IPP / grid) to an acceptable, useable range. STABILIZERS correct the incoming line to neutral voltage within a specified input to provide corrected output voltage within the specified tolerance levels of the load. Our systems are robustly designed and ruggedly built for providing reliable performance even under extreme voltage fluctuations. There are various built-in features that ensures stabilitzation with very user friendly feedback and controls.

APPLICATIONS

- Telecom
- CNC machines
- Textile machinery
- Printing machinery
- Medical equipments
- HVAC Loads
- Total premises voltage stabilization

TYPICAL SINGLE LINE DIAGRAM OF OUR STABILIZERS

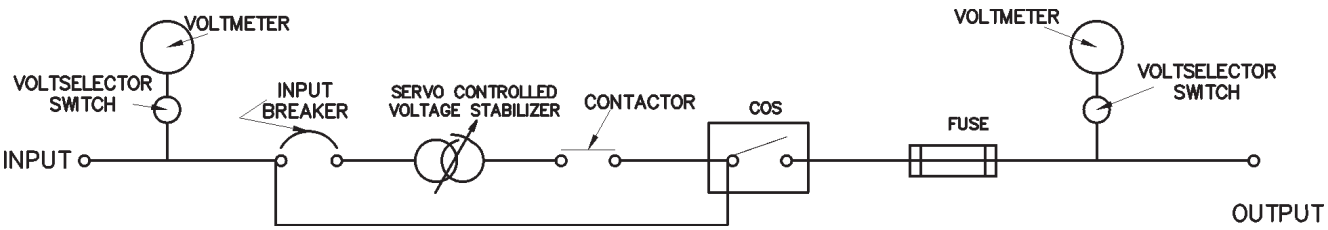

Oil Cooled Systems
Range : upto 1200kva

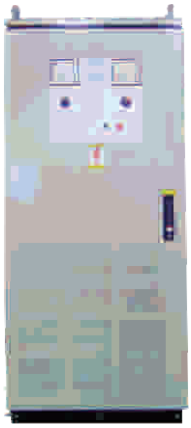

Air Cooled Systems
Range : upto 400 kva

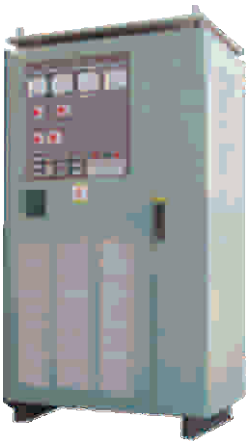

Starter Systems
Range : upto 120 kva

INDUSTRIAL UPS SYSTEMS

Our UPS systems are built on a truly WORLD-CLASS platform. The systems are fully digital systems designed to meet very stringent reliability levels required for any Industrial / Process & Critical Online applications. Having been in this industry for many years we clearly understand the challenging & difficult utility supply situations that customers face, we have honed our skills to design systems with: IP-54 enclosures; Vibration proof systems; MIL specifications and even SEISMIC Compliance.

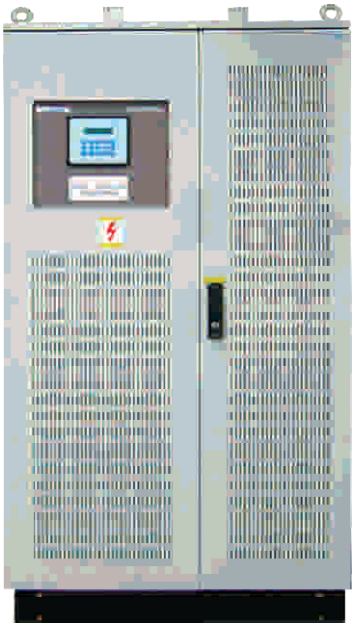

RANGE

- 6 KVA to 480 KVA
- 1 phase output & 3 phase output configurations
- Standalone / Hotstandby / Parallel / Multi Redundant configurations
- SEISMIC compliant design

SALIENT FEATURES

- True online double conversion topology
- Fully digitally controlled system, Both rectifier / charger and inverter controls are DSP based. Diagnostics and metering are microprocessor based.
- Both rectifier / charger and inverters employ PWM technique using IGBTs as switching devices.
- Built-in input power factor controller, maintaining input power factor @ 0.99 at full load.
- Input current harmonics limited to less than 5% at full load.
- Total output harmonic distortion of 4% on 3 : 1 crest factor (non-linear load).
- Excellent transient capability, with recovery within 5 msec.
- Immune to input phase sequence changes.
- Builtin synchronized static switch.
- SNMP compatible.
- Built for high critical / industrial / process plant environment application.

TYPICAL SINGLE LINE DIAGRAM OF OUR UPS SYSTEMS

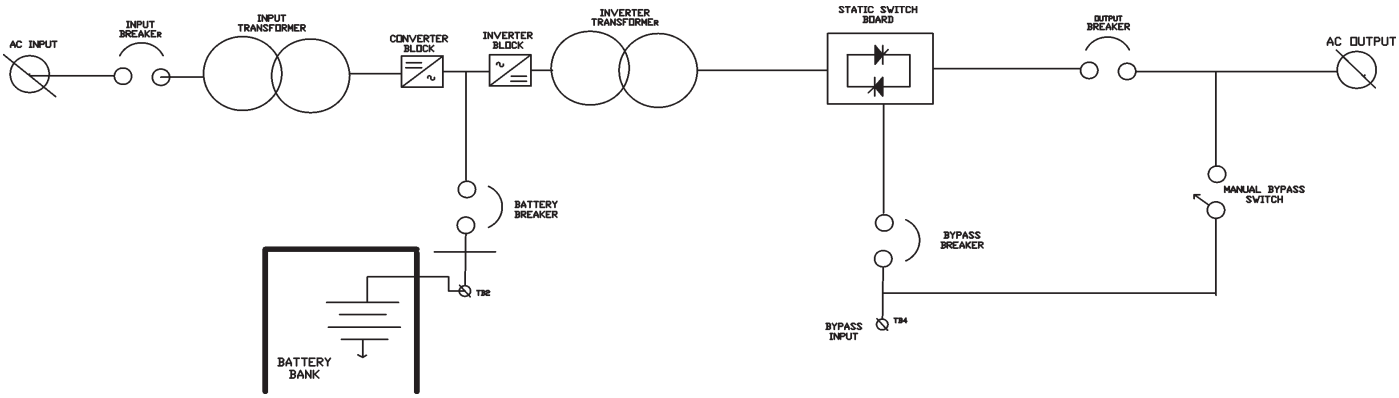

DC POWER SYSTEMS

These are critical power supply systems (control & communication) in all commercial & industrial applications. These applications demand a high degree of customization and design capability. Our range for these systems cover : DC Systems / Rectifiers; Float cum Boost Chargers; Redundantly configured FC / FCBCs. We have the capability to build these systems from simple diode bridge technoloy to advanced PWM technology depending on the application and requirement.

SALIENT FEATURES

- Available in complete range and configurations.
- Can be designed to meet stringent specifications and operating conditions.
- Duba offers both thrustor controlled version as well SMPS version.
- Dubas offers IGBT based PWM rectifiers / Battery chargers with near unity input PF and low input current harmonics (5%).
- Approved by most of the major consultants in India.
- Thousands of installations with major users spread across varied applications.
- Capability to conduct factory load tests upto 400 KW.

PRODUCT RANGE :

- 24 V / 48 V / 110 V / 220 V / 500 V DC
- 10 Amps to 1200 Amps
-

•CONFIGURATIONS :

- FC / FCBC / REDUNDANT or and customer specific
- Battery combinations - SMF / VRLA / Rubular / Ni Cd / Plante

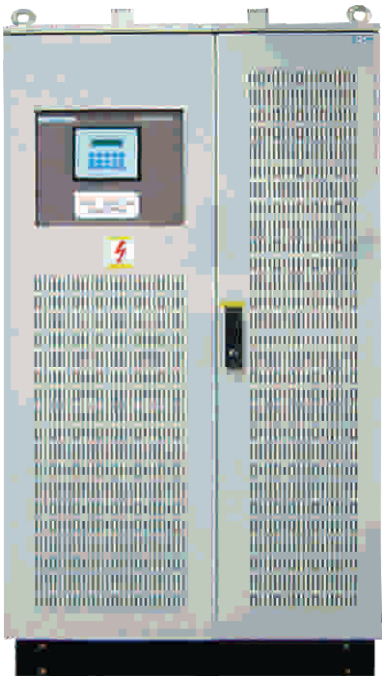

ACTIVE POWER FACTOR CONTROLLERS

APFC is an active solid state power factor controller capable of correcting both displacement and distortion power factors, compensating the reactive current drawn by the load with a priority to correct displacement power factor. APFC with adequate sizing improves the power factor to near unity (>0.99) dynamically. since it is an active compensator, compensation of both inductive and capacitive (+ and -) is achieved. this avoids the dangers of resonance and over compensation like in thrustor switched capacitor banks. Power factor capacitor are fully eliminated in this configuration.

HYBRID APFC

HYBRID APFC configuration is the ideal way to connect APFC to an existing installation of fixed capacitor banks and achieve near unity PF. In this configuration, APFC can be connected in parallel with a fixed capacitor bank. The fixed capacitor bank can be sized to meet a portion of the VAR demand and blalance can be provided by APFC. Since APFC can compensate from (-) to (+) dynamically, the corrected PF will be near unity.

ACTIVE HARMONIC FILTERS

NIEC offers a wide range of harmonic filters. Theses are DSP controlled equipments using IGBT as switching devices. H-Filters are active equipments capable of dynamically compensating upto 40th harmonic. These are ideal for all kinds of applications where in high harmonic currents are present. Installation of adequately sized H-filters can completely nullify the harmonic problems in the network. H-Filters are available for both 3 wires and 4 wires networks.

The system also balances the three phase currents and improves the input power factor. Many H-filters (equal or unequal ratings) can be connected in parallel to meet the adequate rating demands as well as progressive demands through the time.

TECHNICAL SPECIFICATIONS

APFC	
Models	APFC 075 APFC 100 APFC 150 APFC 200
Input	415V, 3phase, 3 wire / 4 wire
Input Voltage Window	415v+10%
Input Freq. Window	50 Hz+5%
Configuration	Parellelable upto 4 Panels in a group
Compensated PF	1.0 (by defult, settable)
Response Time	Better than 20 msec
Protection	Input MCCB/SFU Electronic over current Thermal Voltage out of window Overload Short circuit
Metering	Alphanumeric display for key parameters
Indication	Status indications provided by LEDs
Degree of Protection	IP 21
Communication	RS 232
Custom built configurations are possible based on application in both APFC and H-Filter range	

H-FILTERS	
Models	HF 030 HF 060 HF 100
RMS Current Rating	30 Amps (for HF 030) 60 Amps (for HF 060) 100 Amps (for HF 100)
Input	415 V, 3 Phase, 3 wire / 4 wire
Input Voltage Window	415V±10%
Input Freq. Window	50 Hz ± 5%
Configuration	Parellelable upto 4 panels in a group
Filtering Level	Upto 20, within the 40th harmonic
Attenuation Level	>97%
Response Time	Better that 20 msec
Protection	Input MCCB/SFU Electronic over current Thermal Voltage out of window Overload Short circuit
Metering	Alphanumeric display for key parameters
Indication	Status indications provided by LEDs
Degree of Protection	IP 21
Communication	RS232

NIE/EXP/0408

New India Electricals Ltd.
Power House, # 18, J.C. Road, Bangalore - 560 002. INDIA

Tel : +91 80 42434343, 22235434 **Fax** : +91 80 22226666
Mail : **National :** sales@newindiaelectricals.com
International : export@newindiaelectricals.com
Site : www.nielgroup.com / www.newindiaelectricals.com